Для заказа перейдите по ссылке: honeywell-trade.ru

Или позвоните по телефонам: 8 800 333-22-13; +7 (495) 23-23-407

Air Damper Actuators

Series LKS 120 Series LKS 130

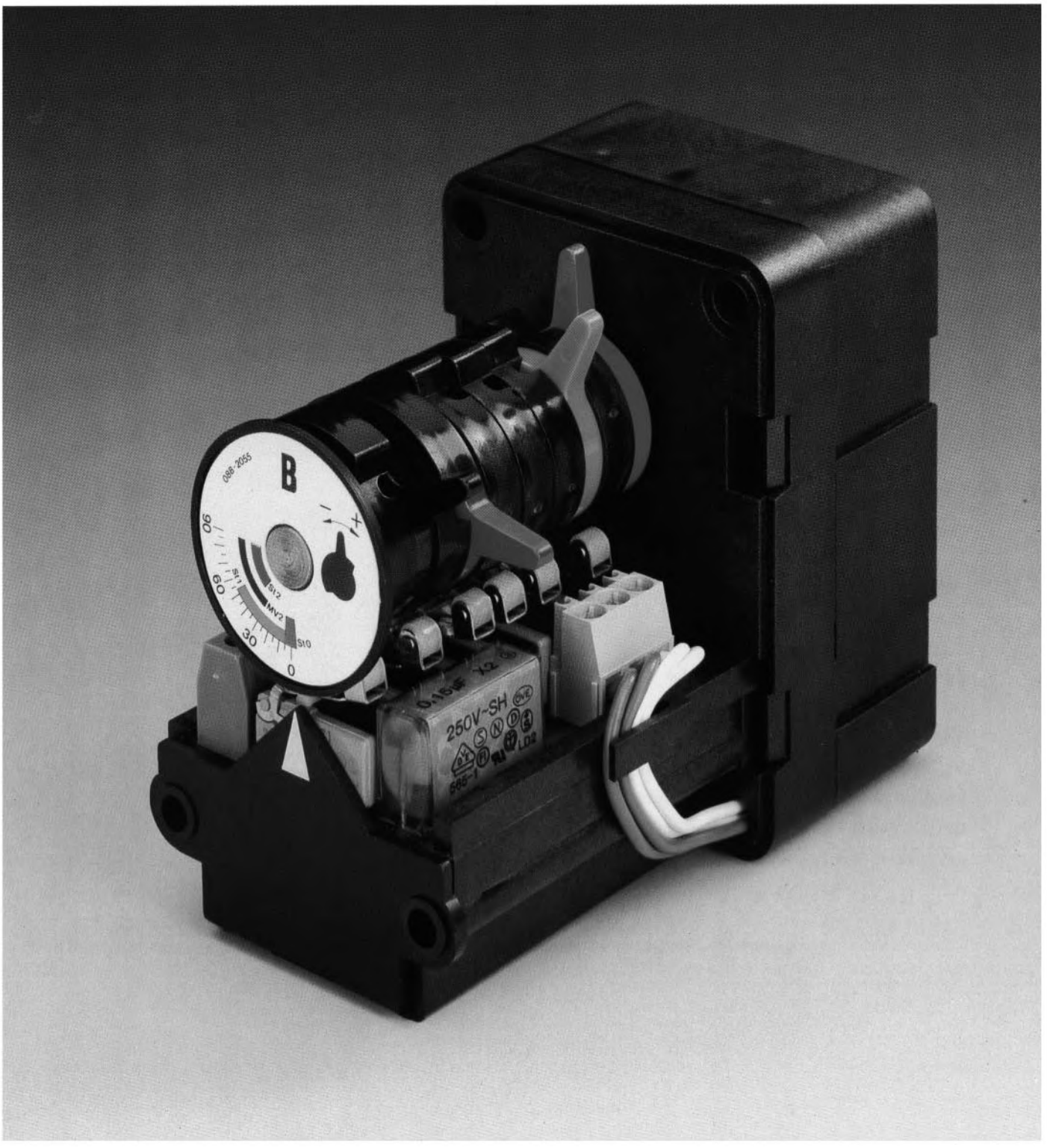

Air Damper Actuators

For single and double-stage oil- and gas burners

These actuators are intended for use in single and double-stage oil- and gas burners, with or without a fully closing damper. Typical features of these actuators are the remarkably small dimensions, extremely robust design and highest possible degree of reliability.

The drive unit, consisting of a synchronous motor with reducing gears, is contained in a synthetic housing and is completely maintenance-free.

Connections

All the electrical components are fixed on a printed board which is protected from any contact. The electrical connection is made to a 5- or 8-pole terminal block. As standard, a flattened shaft end with a diameter of 8 mm for connection is included to the air damper axle.

Air damper infinitely adjustable

The air damper may be regulated through a range of 90° and cams allow it to be adjusted in an infinite number of ways. In the standard design, this adjustment is made by way of lever cams. However, it is also possible to use cams with spindle bolts. Colour-coding matches the levers to the respective performance level of the burner; blue for closing damper, orange for low performance, red for high performance. This colour-code is also to be found on the relevant circuit diagram and on the setting dial.

While the LKS 120 is only designed for two final settings, the LKS 130 may be used for three positions, e.g., closing damper, level 1 and level 2.

In order to set the turning angle on the LKS 120, the "open function" may be obtained by means of a push-button on the relay. Both series include a dry pilot switch for valve release at each level.

Series LKS 120/Series LKS 130

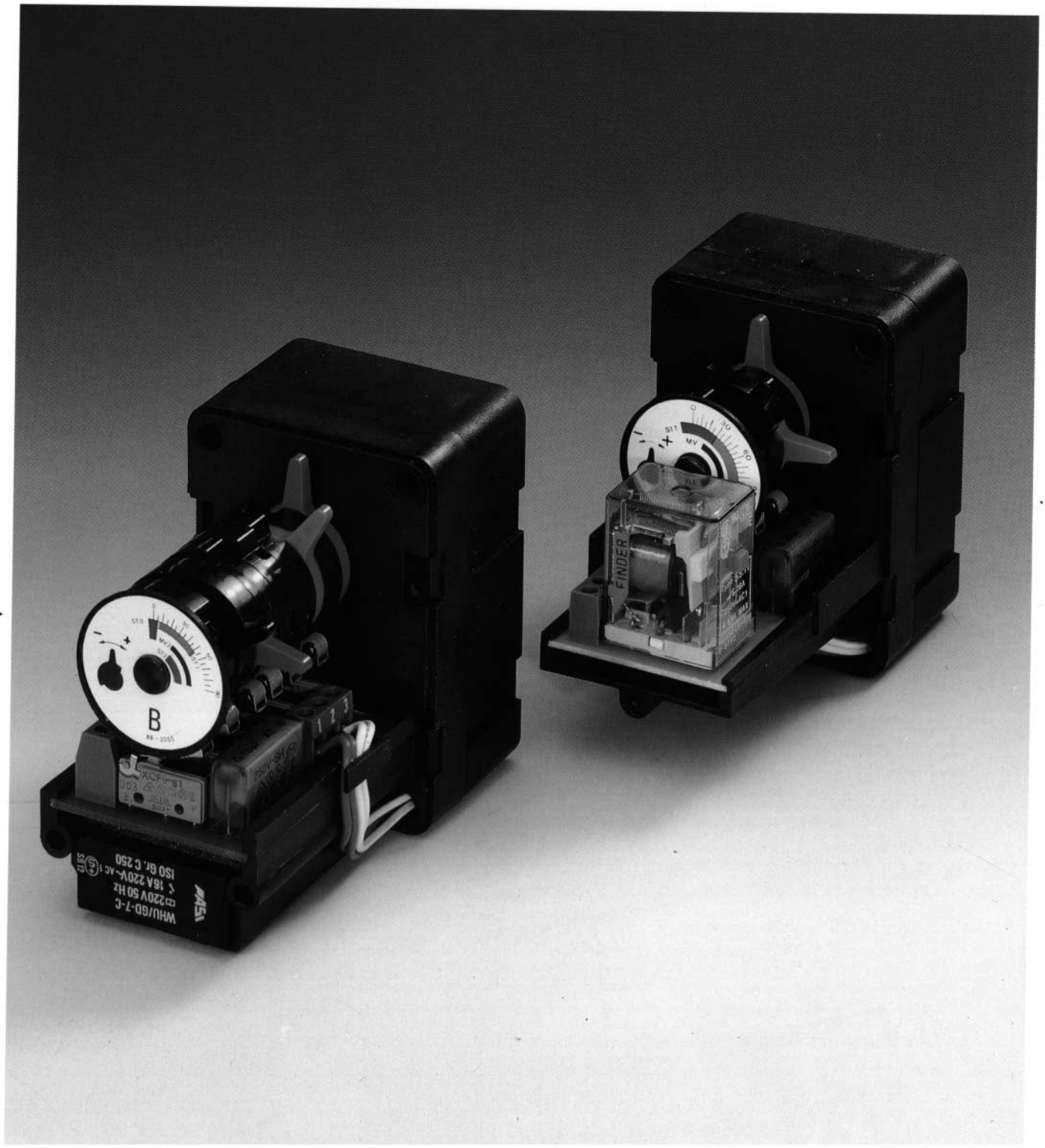

Photo:
LKS 120 ▶▶
LKS 130 ▶

Technical Data

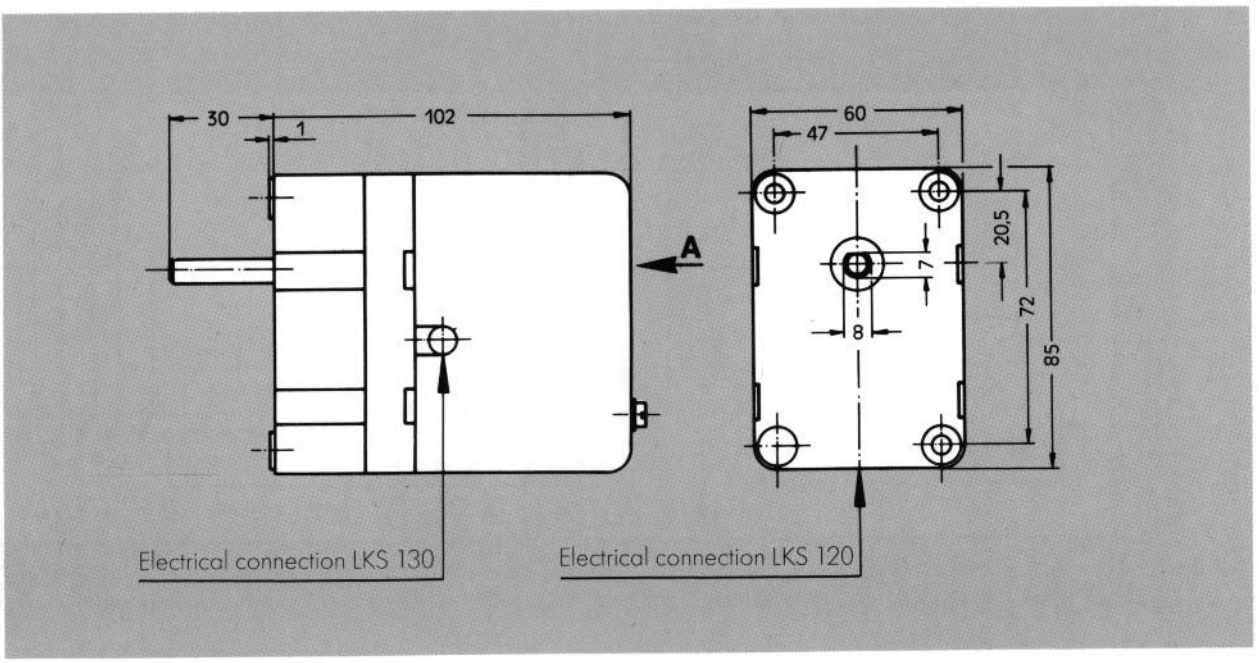

	LKS 120	LKS 130
Voltage	230 V~, 50 Hz	230 V~, 50 Hz
Power consumption	9 VA	9 VA
Position: stage 0	blue, fully closed	blue, fully closed
stage 1	orange	orange, 1 simultaneously-rotating follow-up switch and 1 dry pilot switch (HS 1)
stage 2	–	red
MV	black	black
Regulating time for 90°	5 s	5 s
Torque	75 Ncm	75 Ncm
Housing	synthetic material, black, non-combustible, self-extinguishing	
Type of protection	IP 31	IP 31
Electrical connection	5-pole terminal block	8-pol terminal block
Mounting	through-holes for M5 × 50 mm	
PTO	free shaft end, ⌀ 8 mm, flattened on one side	
Ambient temperature	– 10 to + 60 °C	– 10 to + 60 °C
Weight	0,5 kg	0,55 kg

Subject to alteration

Series LKS 120/Series LKS 130

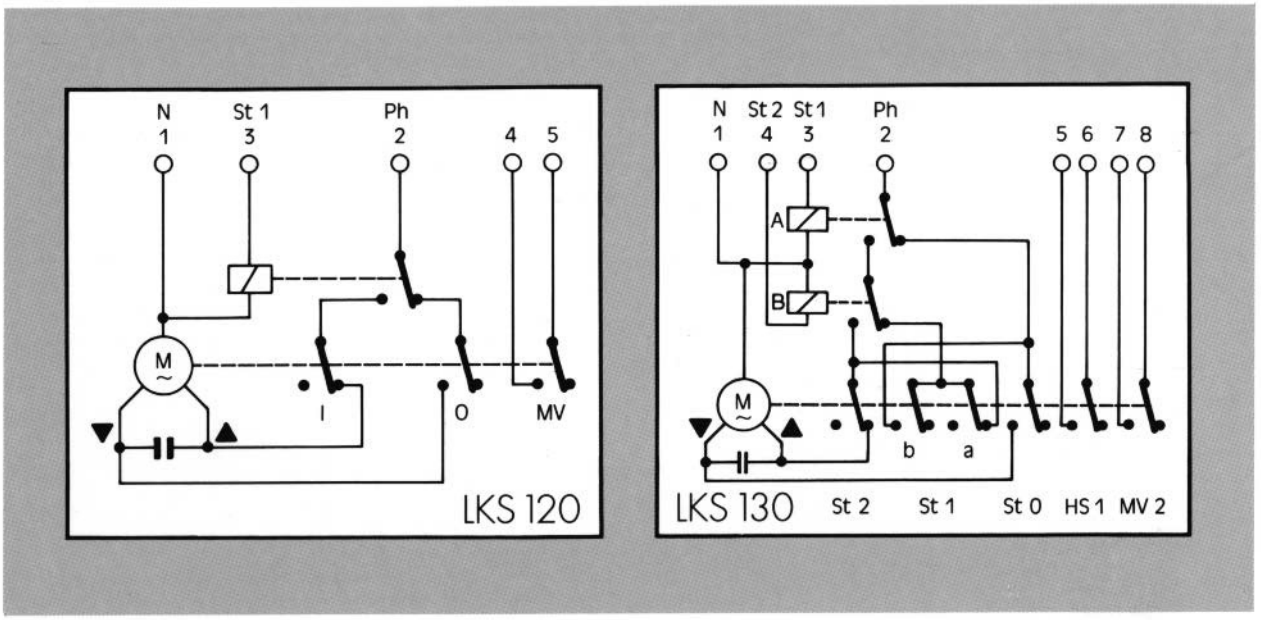

CONECTRON
Kleinmotoren-Stellantriebe

Satronic AG
Honeywell-Platz 1 • CH-8157 Dielsdorf • Telefon +41 1 855 22 11 • Fax +41 1 855 22 22

How to order: Please enter the relevant letter or number in the boxes:

LKS120 – (□ □ – □ □)
LKS130 – (□ □ – □ □)

1. Rotating direction
   clockwise (right) A
   counter-clockwise (left) B
2. Shape of the PTO shaft
   ø 8, flattened on one side 5
   special shaft 6
3. Regulating time for 90°, 5 s 5
4. Standard connections S1 S1

All specifications refer to the actuator when viewed from the back.

Example: LKS 130, rotating clockwise, shaft ø 8 flattened on one side, 5 s regulating time, standard connections: LKS 130 – (A 5 – 5 S 1)

Models made to customer's specifications upon request