Для заказа перейдите по ссылке: honeywell-trade.ru

Или позвоните по телефонам: 8 800 333-22-13; +7 (495) 23-23-407

S4563

IGNITION CONTROLLER

INSTRUCTION SHEET

APPLICATION

The S4563 ignition controller provides automatic ignition and flame supervision either in direct gas burner or in intermittent pilot gas burner applications with safety timer.

The S4563 ignition controller funtions in accordance with EN 298.

S4563A . . . . . code A/M/C/L/X/N
S4563B . . . . . code A/M or T/C/L/X/N
S4563C . . . . . code F/M/C/L/X/N
S4563D . . . . . code F/M or T/C/L/X/N

FEATURES

- **Flame supervision.**
- **Built–in 5 ... 50 Hz spark ignition.**
- **External reset and alarm.**
- **Factory set safety timer 0 ... 50 s**
- **Factory set prepurge/waiting timer 0 ... 30 s**
- **Supply voltages of 220 ... 240 V in a single product.**
- **Full operating sequence after flame loss.**
- **Non volatile lock–out according EN 298.**
- **Protective impedance on flame rod**

Optional

- **Extended spark ignition.**
- **Factory set delayed flame output with stabilisation time T_{stab} between 0 ... T_s s, only for Intermittent Pilot (IP) applications.**
- **8 mm separation for flame opto coupler.**
- **Internal wiring for: two staging**
  external ignition
  closed loop sparking
  sparking to ground
- **Internal indicators for diagnostic purposes (heat demand/air pressure/high limit/flame/alarm)**
- **Internal reset switch**
- **Internal Electro Magnetic Compatability (EMC) filter**
- **Combined ignition rod/flame sensing**

SPECIFICATIONS

Model

Suffix A: atmospheric, direct burner ignition
Suffix B: atmospheric, direct burner ignition, flame relay or opto coupler output
Suffix C: fan assistant, direct burner ignition
Suffix D: fan assistant, atmospheric, direct burner ignition, flame relay opto coupler output

Supply voltage

220 ... 240 Vac, 50 Hz

Power consumption

10 VA

Humidity

90% RH max. at 40 °C

Ambient temperature

0 ... 60 °C

Electrical rating

All outputs seperate: 220 ... 240 Vac, 50 Hz,1 A, cos φ 0.6
All outputs together: 3 A (max)
Flame opto coupler: 5 Vdc, 10 kΩ

Electrical connection

High voltage spark: 2.8 x 0.5 mm spade terminal
Flame sensing: 6.3 x 0.8 mm spade terminal
Ground: 4.8 x 0.8 mm spade terminal
PCB connectors: STOCKO/PHILIPS KMT

Housing

Protection: IP 00*
Material: ABS UL94 HB (optional PPO UL94 V0)

* Protection against electric shock must be provided by the appliance in which the control is installed.

Timing (depending on O.S. number)

Waiting time (T_w)/Prepurge time (T_p): 0, 1.5, 5, 10, 20 or 30 s
Safety time (T_s): 2.2, 2.7, 3.3, 5, 7, 10, 15, 22, 33 or 50 s
Extended spark ignition time and delayed flame output (IP only): 0 ... T_s s (dependent on elaps of safety time)
Self check time (T_c): 1.5 s

Flame sensing

Min. flame current: 0.9 μA
Response time on: > 0.2 s
Response time off: < 1 s

Subject to change without notice. Printed in the Netherlands.

Cable length
Flame sensing: 1000 mm max.
Ignition: 500 mm max.
Other periferals: 1000 mm max.

Ignition
Spark voltage:
standard 15 kV at 40 pF load
high 23 kV at 40 pF load
Repetition rate: 5 ... 50 Hz (depending on O.S. number)
Spark energy:
standard 3 μAs
high 10 μAs
Max. spark gap: 3.5 mm

Remark
Flame opto coupler:
- Opto coupler interface needs a debounce time > 20 ms in order to prevent noise caused by transiënts.
- Opto coupler output is separated by reinforced insulation, so it can be used in SELV circuits.

Flame relay:
- The flame relay contacts are not separated by reinforced insulation and as a result it is not intended to feed SELV circuits

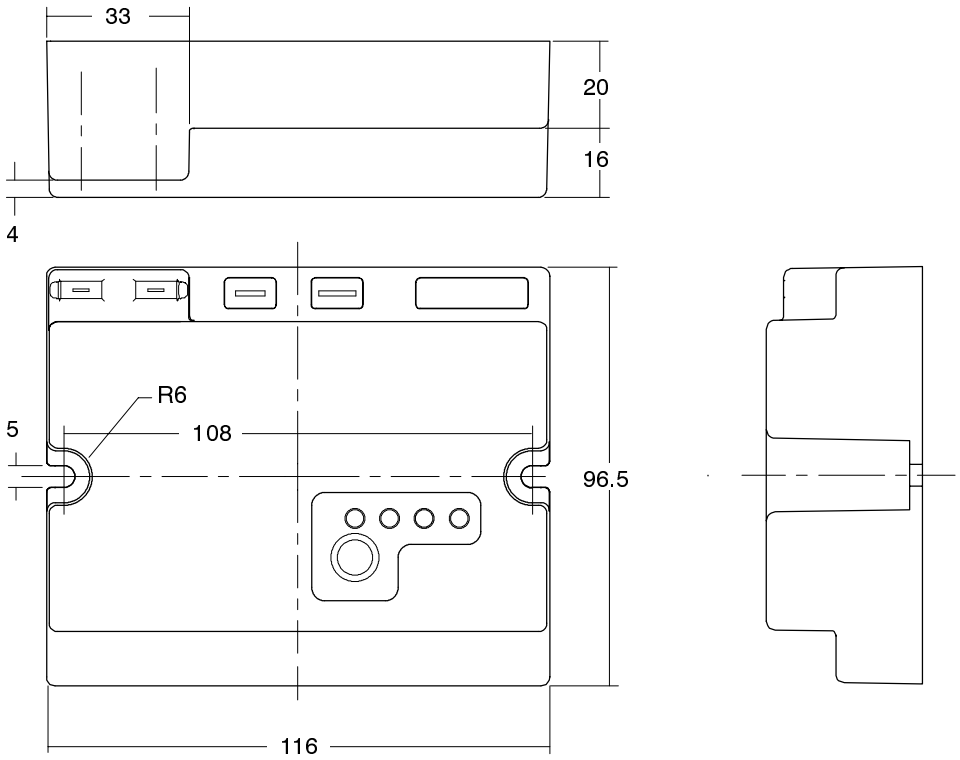

Fig. 1. Outline drawing

SYSTEM OPERATION

Suffix A, B (see fig. 10.)
When there is a call for heat a selfcheck time followed by a waiting period (T_w) elapses before built-in igniter and gas valve are switched on.
The ignition spark ignites gas and resulting flame is detected by the flame rod.
Ignition is switched off after a predeterminated extended ignition time and flame establishment.
For suffix B flame recognition will be acknowledged after a predetermined stabilisation time (T_{stab}) by a flame relay or opto coupler.
Both the extended ignition time and the stabilisation time are dependent on elaps of safety time.
If flame is not established within the safety time (T_s), the S4563 ignition controller locks out.
If the flame is lost during normal run, the S4563 ignition controller repeats start sequence.
Optional for diagnostic purposes the sequence can be optically indicated as there are: call for heat present, high limit not tripped and flame present.

Suffix C and D (see fig. 11.)
When there is a call for heat the fan starts running through the no air position of the air proving switch.
When sufficient air flow is proven by the air proving switch, a prepurge time T_p elapses before the built-in igniter and gas valve are switched on.
The ignition spark ignites gas and resulting flame is detected by the flame rod.
Ignition is switched off after a predetermined extended ignition time and flame establishment.
For suffix D flame recognition will be acknowledged after a predetermined stabilisation time (T_{stab}) by a flame relay or opto coupler.
Both the extended ignition time and the stabilisation time are dependent on elaps of safety time.

The use of a stabilisation time (T_{stab}) output is only allowed for IP application.
If flame is not established within the safety time (T_s), the S4563 ignition controller locks out.
If the flame is lost during normal run, the S4563 ignition controller repeats start sequence at prepurge.
If no air is proven by the air proving switch within the prepurge time (T_p), the ignition controller stays in waiting mode with fan running.
Optional for diagnostic purposes the sequence can be optically indicated as there are: call for heat present, air flow proven and flame present.

Lock-out reset

The S4563 can be reset by either depressing the internal or external reset button.
Optional for diagnostic purposes the alarm signal can be optically indicated by an internal indicator.
If a first reset is not succesful, wait at least 15 seconds before attempting another one.

NOTE 1.: When first starting, the ignition controller can be in the lock-out condition. After applying the heat demand, wait 15 seconds and depress the reset button to free the ignition controller. After a reset an extended waiting or prepurge time will occur.

NOTE 2.: If during normal use the reset button is pressed, the gas valves drop out and the S4563 ignition controller starts a new sequence after releasing the reset button.

NOTE 3.: In case of a suffix B and D series the extended ignition time and the stabilisation time are fixed together in a 1 : 1 ratio.

NOTE 4.: In case of IP systems the pilot valve V_1 and the main valve V_2 are physical one valve. After V_1 is energized and the pilot flame is recognized V_2 is energized. (See fig. 6. and 7. for typical connection diagram).

NOTE 5.: In case of 2 stage systems a low capacity valve V_1 and a high capacity valve V_2 are physical two separated valves. The appliance can be started on low capacity (V_1 energized) and after flame estabishment the high capacity valve V_2 is energized, so the appliance operates at 100% capacity.(See fig. 6. and 7. for typical connection diagram).

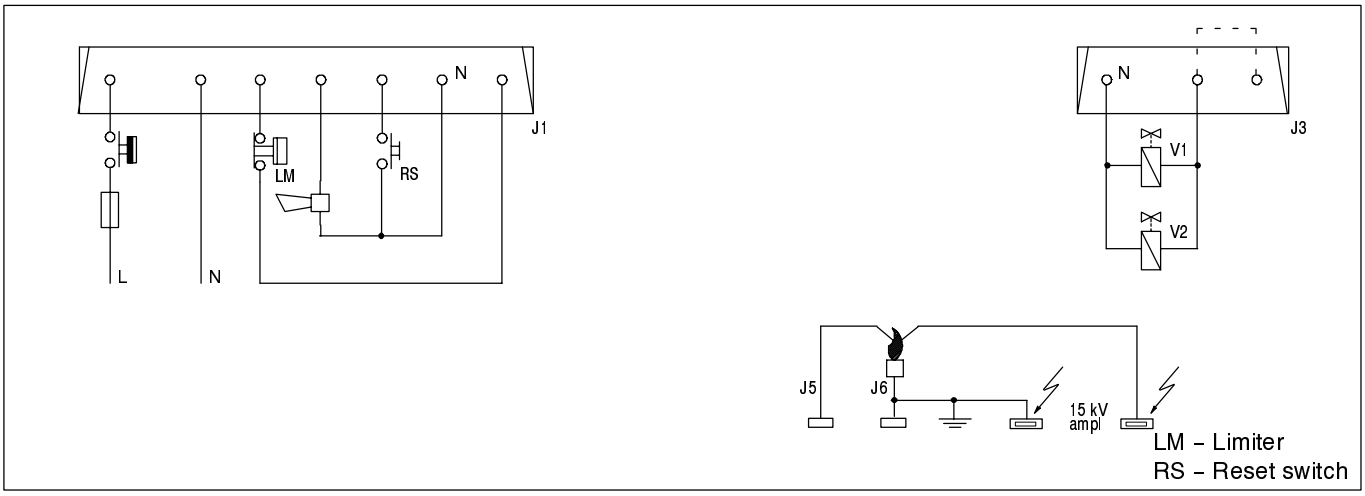

Fig. 2. Connection diagram S4563A

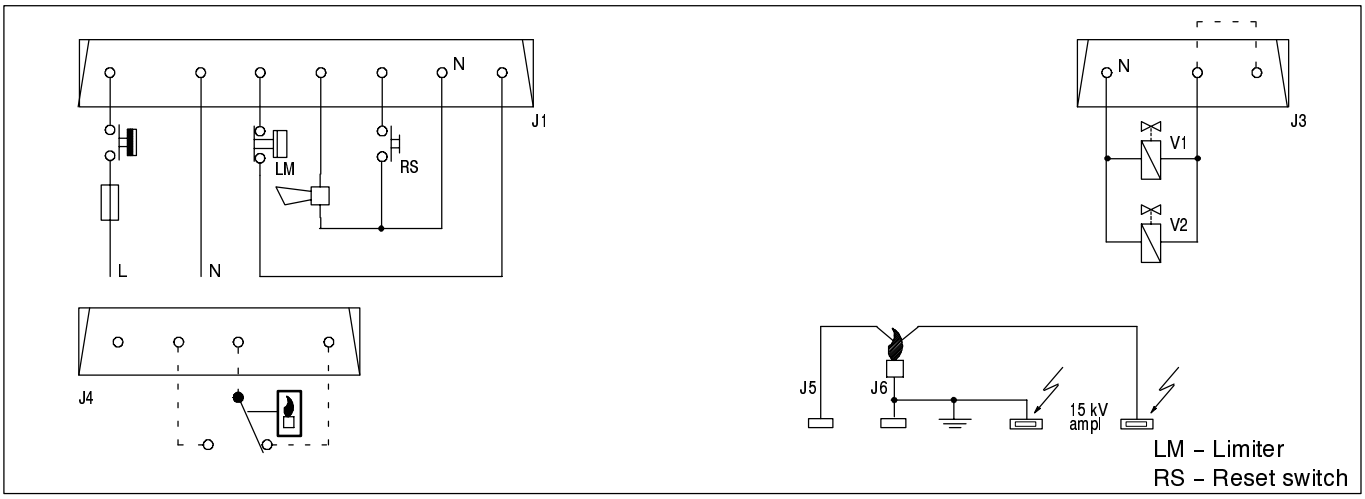

Fig. 3. Connection diagram S4563B

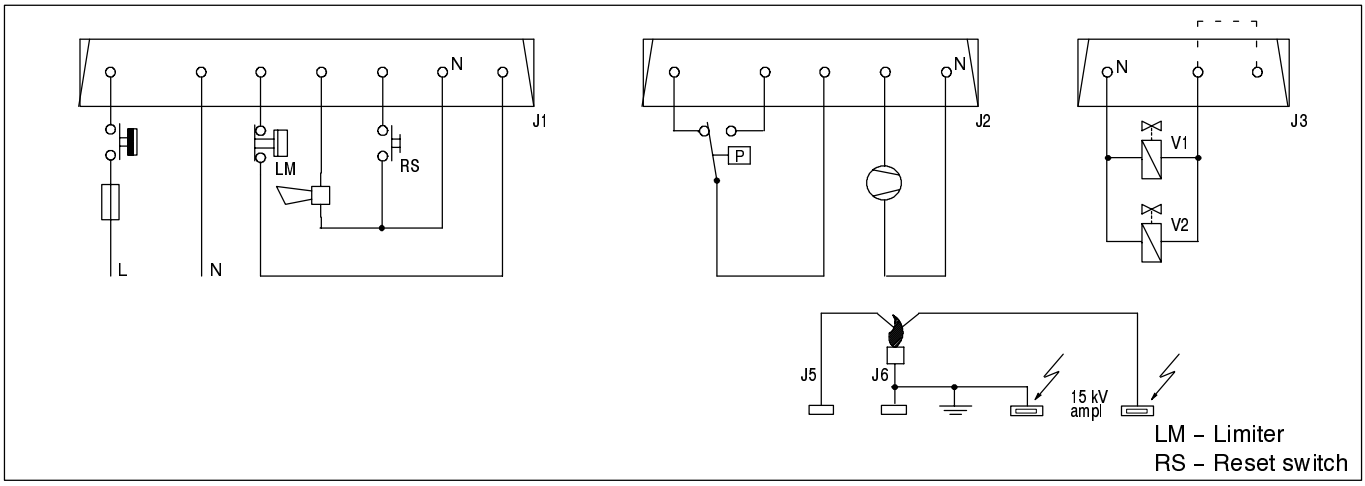

Fig. 4. Connection diagram S4563C

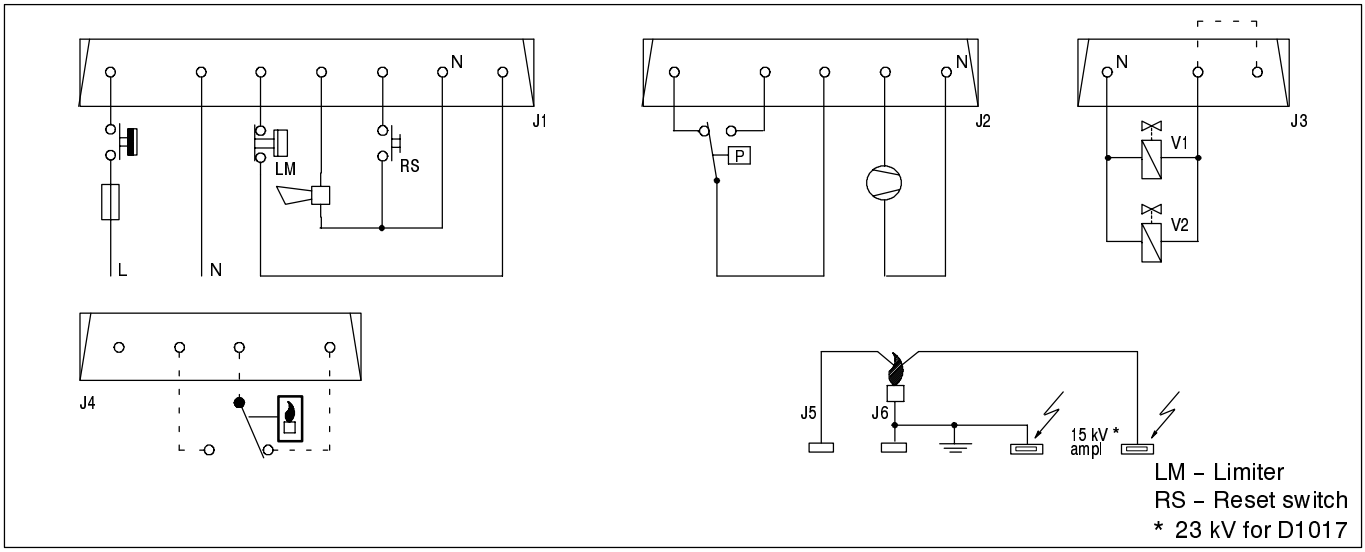

Fig. 5. Connection diagram S4563D

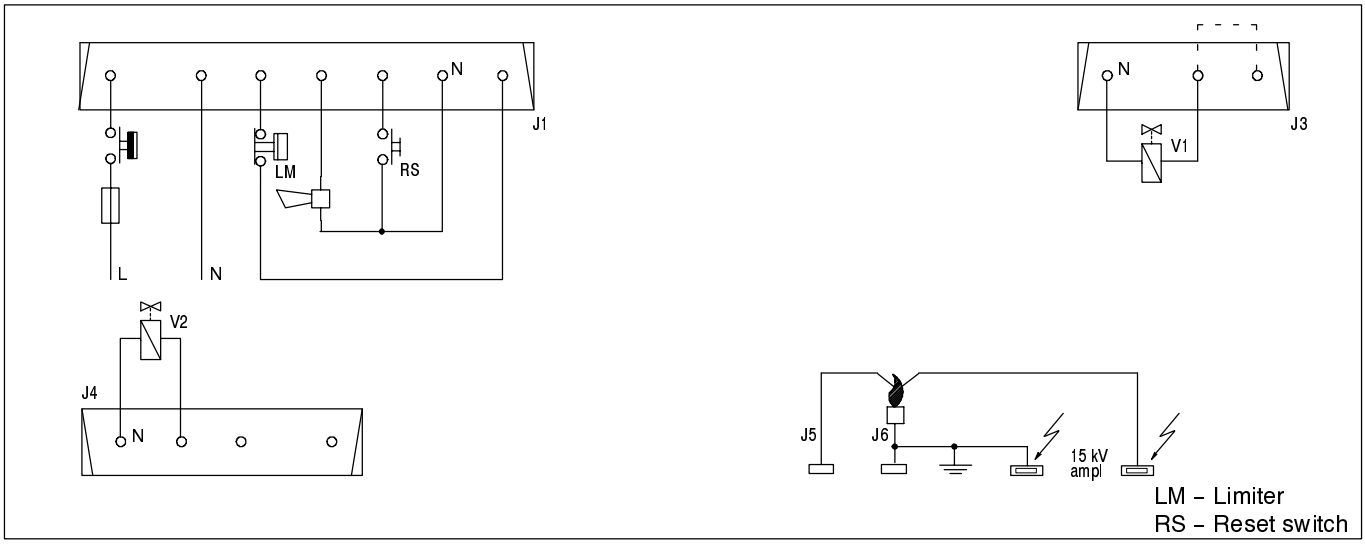

Fig. 6. Connection diagram S4563B for IP or two stage systems

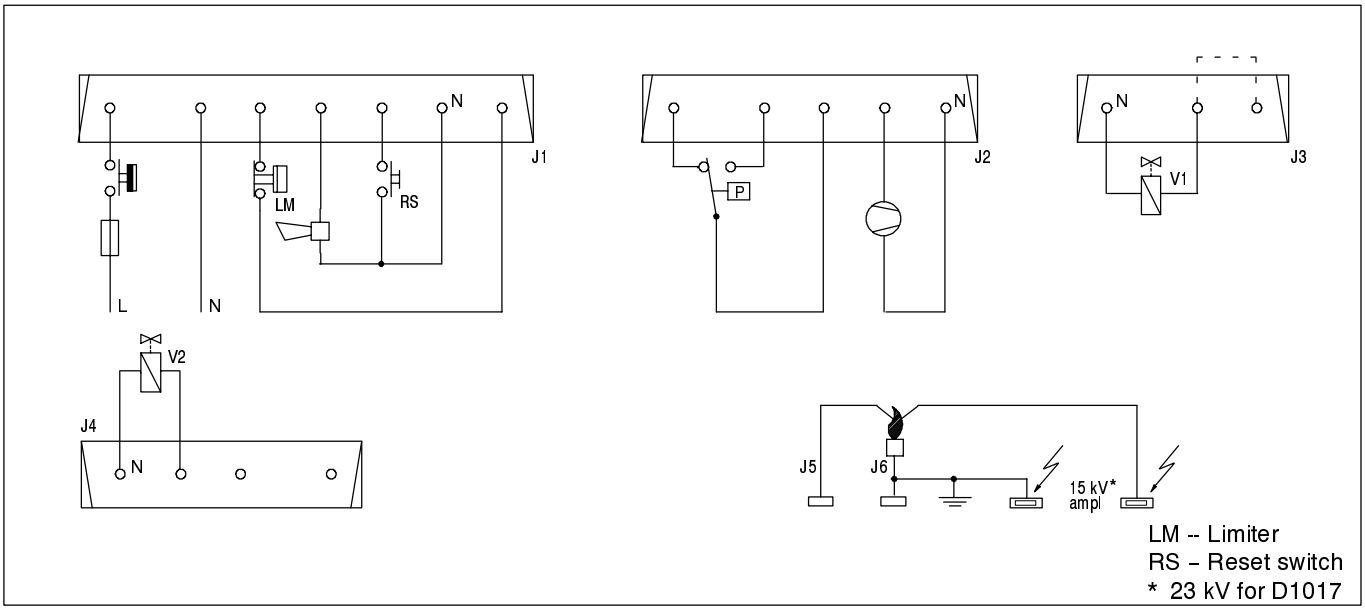

Fig. 7. Connection diagram S4563D for IP or two stage systems

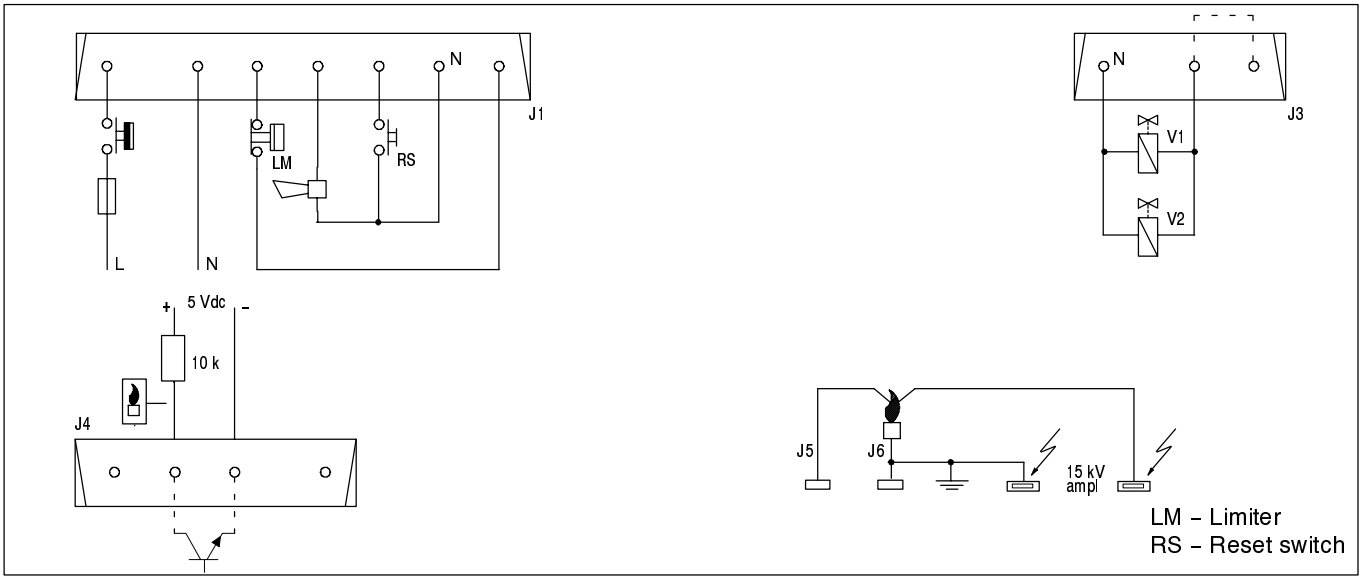

Fig. 8. Connection diagram S4563B with isolated flame opto coupler

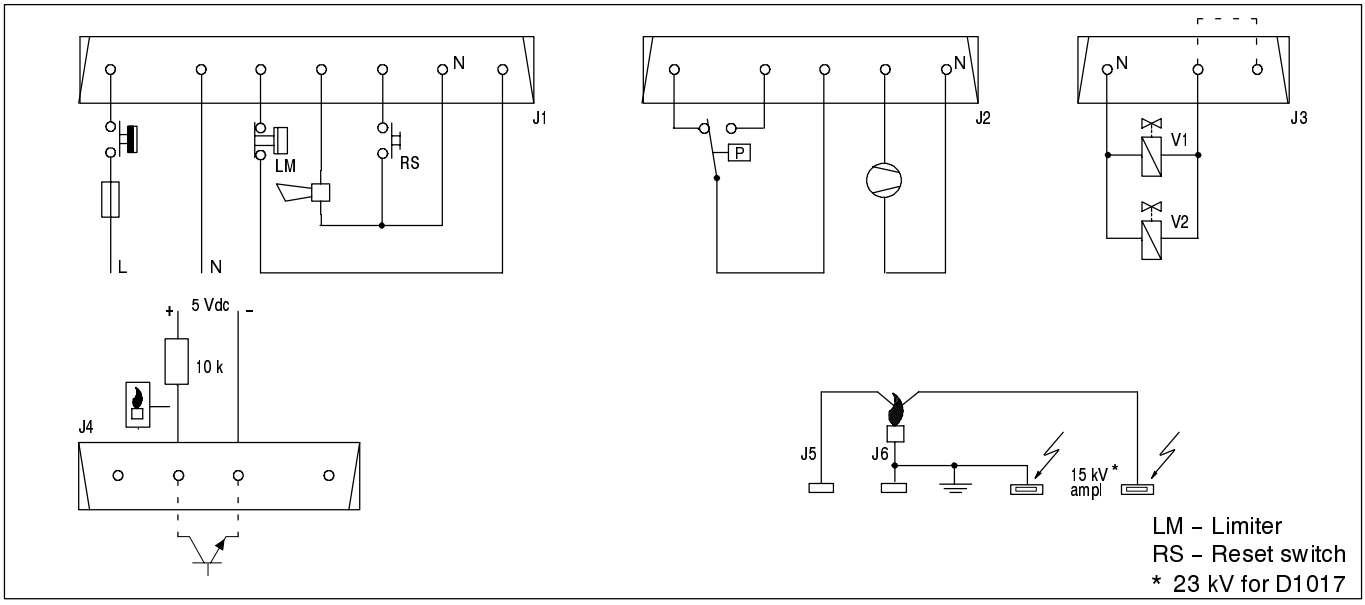

Fig. 9. Connection diagram S4563D with isolated flame opto coupler

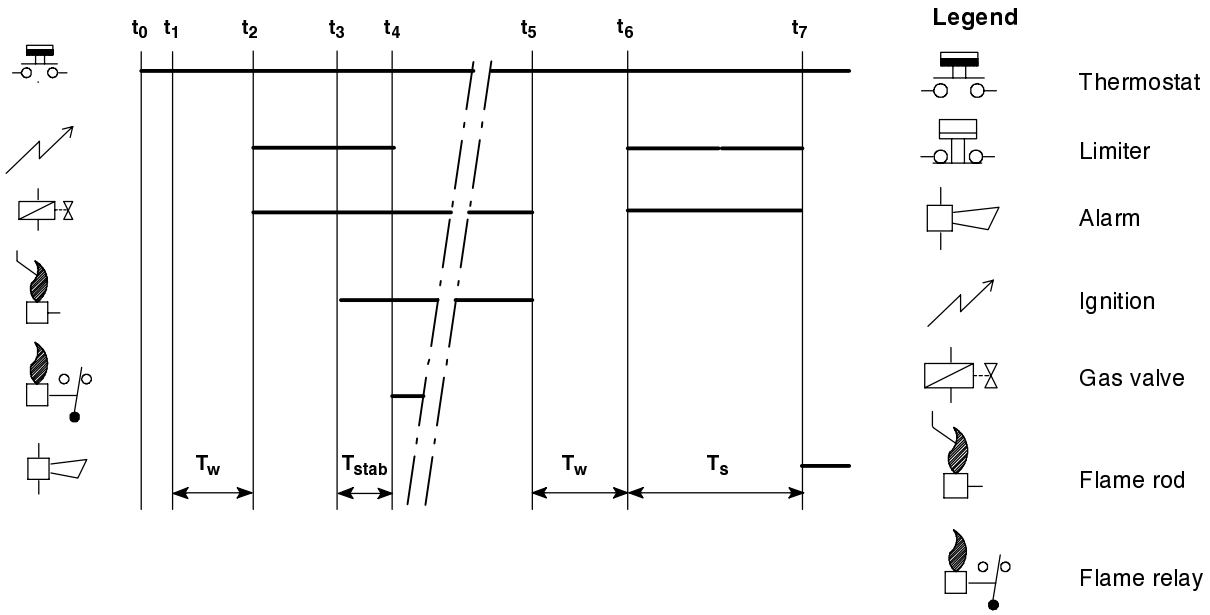

Fig. 10. Functional diagram S4563A and B

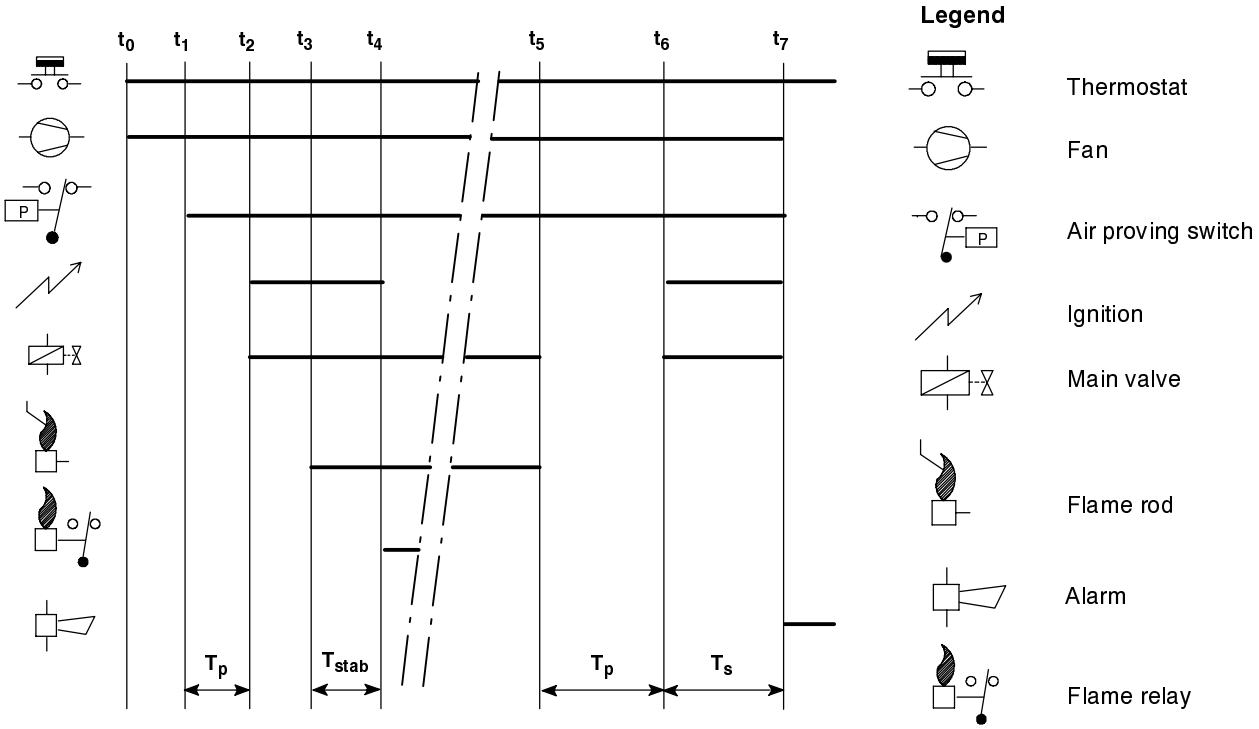

Fig. 11. Functional diagram S4563C and D

INSTALLATION AND CHECKOUT

IMPORTANT

Installer must be a trained experienced service man.

Disconnect power supply to prevent electrical shock and/or equipment damage.

Wiring must be in accordance with local regulations.

Before installing or replacing any control check that type number is correct for the application.

The appliance manufacturer's instructions should always be followed when provided. If such instructions are not provided see fig. 2., 3., 4. and 5. for typical systems.

Ensure combustion chamber is free of gas before start up.

Conduct a thorough check out when installation is completed.

At the first start the ignition controller can be in lock–out; reset to free the control.

⚠ WARNING

After moving S4563 ignition controller from outdoor to indoor conditions, condensation may occur. Do not connect a condensated ignition controller to mains.

Mounting

The ignition controller should be mounted on a flat surface by means of 2 mounting holes (see fig. 1.).

Mounting position

The ignition controller functions position independently.
To ensure reliable long term operation mount ignition controller at a position in the appliance with a low ambient temperature and low radiation.

To suppress Radio Frequency Interference (RFI) the spark electrode cabling should be mounted in a sufficient shielded environment.

In order to get maximum effect of the optional built–in EMC filter, assure a short connection of the GND tab (J6) to grounded metal shield.

Wiring

- Use untinned receptacles for easier connection.
- Use leadwire which can withstand 105 °C ambient.
- Use leadwire which is proven against moisture.
- Wiring between ignition controller and spark sensing electrode should have good quality insulation, suitable for the temperatures encountered.

⚠ CAUTION

If ignition frequency ⩾ 25 Hz or pulse energy ⩾ 45 μAs the ignition cable and its connections shall have a protection against electrical shock.

⚠ CAUTION

Never combine high tension wiring with other wiring.

Fusing

Ignition controller should be externally fused to prevent damage to ignition controller, wiring or peripherals.
Prescribed external fuse: < 16 A slow max

Supply voltage polarity

⚠ WARNING

If ignition controller seems to operate normally but does not detect ignition flame, check for right polarity of power supply (line, neutral).

Spark gap

Refer to the appliance manufacturer's instructions for recommended ignition electrode position.

Checking flame current

- The minimum value should be 0.9 μA.
- To check flame current connect a DC micro–Ampèremeter between flame sensing wire and flame sensor rod.
- If flame current is insufficient check that flame sensing rod is fully enveloped by the flame and that burner is reliable grounded to ignition controller.

Checkout

After installation, set burner system in operation and observe through a complete cycle to ensure that burner system components function correctly.

GENERAL CONSIDERATIONS

The ignition controller should be externally fused.

The ignition controller contains no serviceable parts. Any attempt of replacement of parts will affect the safety of this device and is therefore not allowed.

High temperatures will affect product life.

When the ignition controller is built–in an appliance, the total protection must be IP 40 at least.

To ensure reliable long term operation, mount ignition controller at a position in the appliance with a low ambient temperature and a low radiation.

For safety a high limit thermostat must be connected in accordance with the applicable appliance standard.

The earth connection between ignition controller and shield metal should be as short as possible.

NOTE: Electrical rating of connected controls and air proving switch should be appropriate for the load that is switched by the ignition controller.

Honeywell

Combustion Controls Center Europe

Phileas Foggstraat 7, Emmen
P.O. Box 83
7800 AB Emmen
NL–The Netherlands
Tel: +31 (0)591 695911
Fax: +31 (0)591 695200